Short Overview of EMF exposure systems and exposure system used in an ongoing study (Project NEMESIS, Non-ionising Electric and Magnetic fields and Electrical hypersensitivity Syndrome In Switzerland)

Conference Paper

Author(s):
Müller, C.H.; Schierz, Christoph; Krueger, Helmut

Publication date:
1999

Permanent link:
https://doi.org/10.3929/ethz-a-004361364

Short Overview of EMF Exposure Systems and an Exposure System Used in an Ongoing Study (Project NEMESIS)

C. Schierz, C. H. Müller, H. Krueger
Institute for Hygiene and Applied Physiology, ETH-Zurich, Switzerland

Summary

In the introduction some hints concerning the construction of a human exposure set-up for ELF are given. Then the actually used system in the Project NEMESIS (Non-ionising Electric and Magnetic fields and Electrical hypersensitivity Syndrome In Switzerland) is presented.

Introduction

It is difficult to find well described human exposure set-ups in the literature for ELF electric and/or magnetic fields. The research projects have different objectives. These do not allow the use of a universally applicable set-up. Some investigators use a pragmatic approach, imitating real life situations [1]. Others want to analyse effect models and need a systematic approach. Examples of fields of interest are:

- Sleep (e+m: NEMESIS, see method below)
- Melatonin (m: [2])
- Biochemical effects (e+m: [3])
- Perception (m: [4, 5]; e+m: [6])
- Performance (m: [7]; e: [8])

The literature above includes descriptions of exposure set-ups. Often only indications of the system's construction are given. The information available does not always allow a replication of the study. Investigators interested in whole body electric and magnetic field exposures can find an expensive but well described equipment in [9]. As a resource for the development of new human ELF exposure set-ups an article of [10] may be helpful. Following factors influence the responses to field exposure:

- frequency and modulation
- electrode configuration
- uniformity (homogeneity, isotropy)
- field intensity
- noise, vibration, temperature
- sham exposure
- phase relation between e- and m-field
- construction materials
- time schedule
- dosimetry
- corona, ozone, discharges
- safety aspects

Method: Exposure system used in the Project NEMESIS

An exposure facility has been designed to investigate electromagnetic hypersensitivity during sleep (Project NEMESIS [11]). Therefore only low field intensities have to be generated. At the moment we do not know exactly, how other field parameters influence hypersensitive subjects. But it can be speculated that electric (E) and magnetic (B) fields have a stronger impact in combination rather than separately, that nonuniform fields with time gradients are

more effective than uniform continuous fields. In terms of real-life exposure conditions, 50 Hz inhomogeneous, anisotropic E- and B-fields should be preferred. These conditions make it possible to build a simple but versatile equipment that can be used not only in the laboratory but also in the homes of the subjects, i.e. in their bed.

It is not the topic of this report to discuss the dependent variables. But a short summary is given as follows: Assessment of sleep quality and well-being by means of a diary; heart-rate, respiration and movement taken from four sensors placed under the bedposts (Dormograph). Besides the movements also the position of the centre of gravity of the subject can be determined with the sensors.

- *B-field generating equipment*

The B-field generating equipment consists of a flex coil with 100 windings, 28 cm in diameter. It is sewed into a cotton sheet which is placed under the subjects mattress. As fig. 1 shows, the electric coil is positioned to one side of the centre line, leaving place for a dummy coil made of a coiled piece of string. This asymmetrical configuration allows to investigate, if the subjects try unconsciously to evade the magnetic field in their sleep by changing their sleep position. The electric coil is fed by a 50 Hz current of 55 mA. In the chest-head region, 25 cm above the coil, a magnetic induction of about 2 µT results. The measured distribution of the magnetic field induction is depicted on the left side of fig. 2. It can also be calculated by means of formulas given in the appendix. Compared to a foam mattress a spring interior mattress reduces the magnetic field less than 5%.

- *E-field generating equipment*

In the breast-head region, an E-field of about 160 V/m can be generated by a conducting fabric charged up to a 50 Hz oscillating voltage of 400 V (p-p, rel. to the environment). This rectangular fabric with a size of 20×40 cm is also sewed into a cotton sheet and placed under the mattress. In case of a spring interior mattress it has to be placed on the top, under the linen sheet, otherwise the metallic springs distort the electric field and reduce the maximum field strength to 20%. The measured distribution of the electric field produced under a foam mattress is depicted on the right side of fig. 2. Conducting materials and voltage carrying wires near the bed may affect the electric field distribution. Consequently they have to be removed if possible and the E-fields have to be checked with measurements.

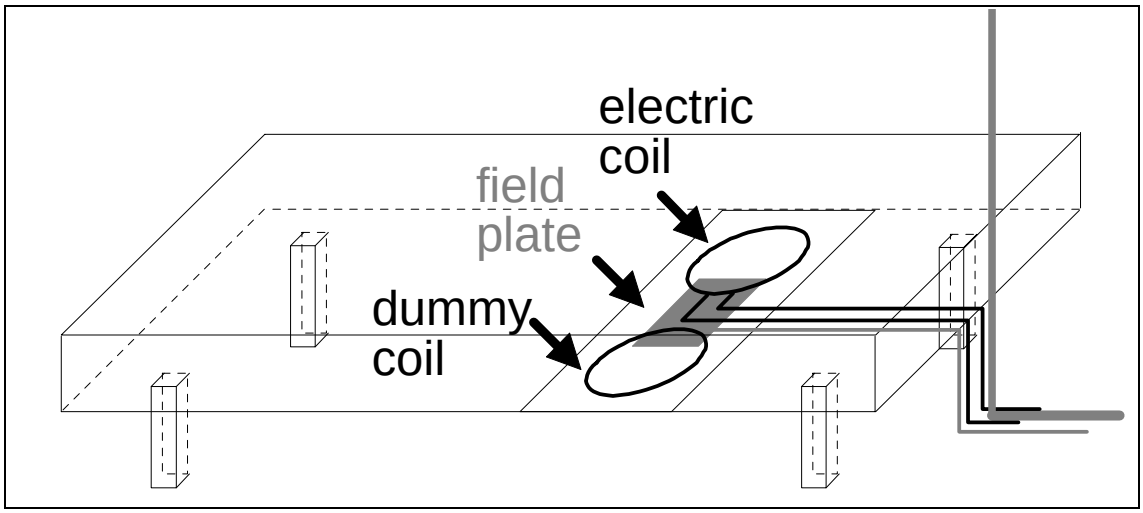

Fig. 1. Field generating equipment for provocational tests in subject's bed. The vertical rod at the right represents one phase of the E-field generator as well as the carrier of a sensor head for environmental factors (temperature, humidity, illumination and noise).

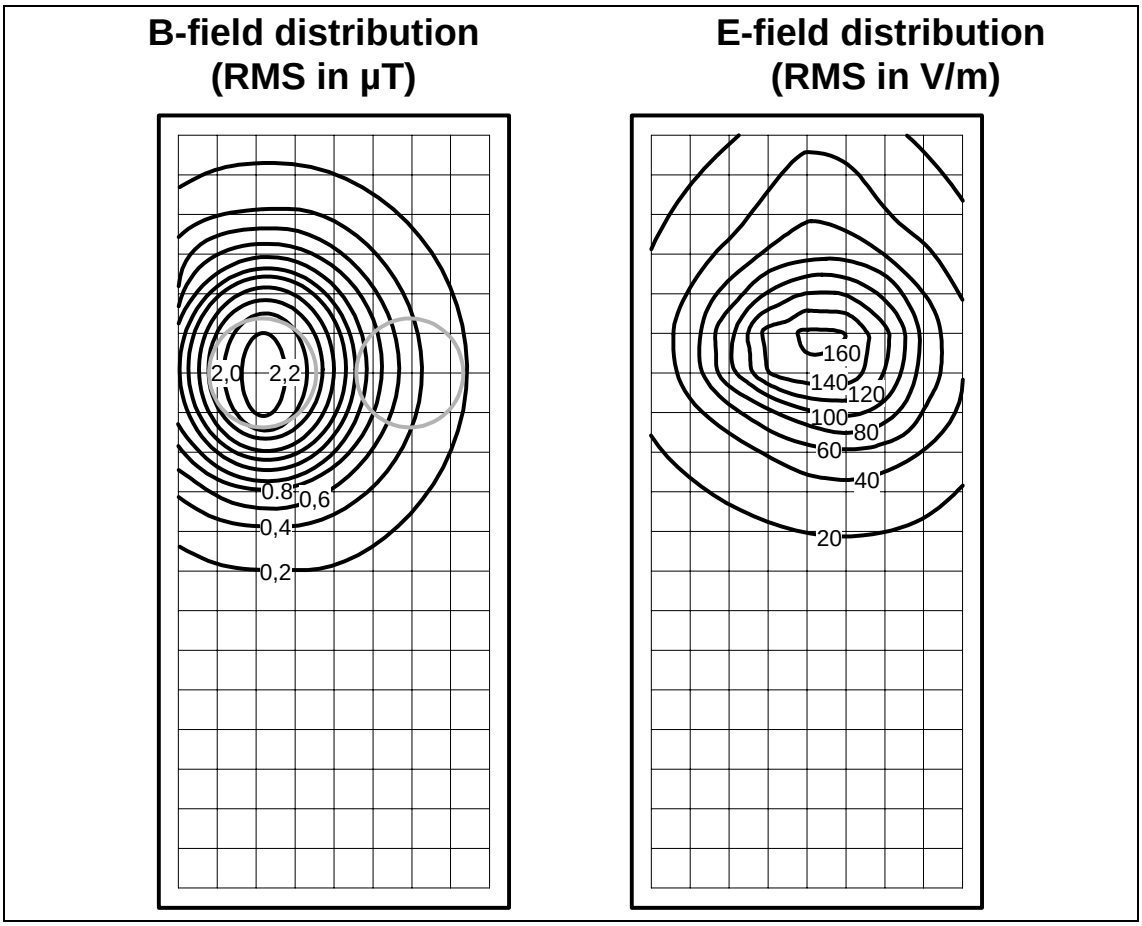

Fig. 2. Example of the distribution of the magnetic (left) and electric (right) fields in a bed, over a foam mattress. The two circles on the left picture represent the electric and the dummy coil (see fig. 1). The fields have been measured with a system EFA-3 (Wandel & Goltermann, Eningen, Ger.) at the grid crossings. Head and breast of the subjects are exposed to these fields in a double-blind controlled schedule at night.

- *Electric circuit*

It is often the case, that electromagnetic hypersensitive persons interrupt the power supply at night-time by means of automatic switches. Consequently the field generators had to be autonomous. As is depicted in fig. 3, the electric circuit is fed by a stabilised voltage, supplied by a 12 V storage battery. This has also the advantage that the system is free of voltage drifts coming from the ground wire of the power supply network. The stabilised voltage supplies three different assemblies: A charge pump consisting of a network of capacitors, a current amplifier and a 50-Hz-sine-wave generator which modulates the voltage and the current output of the system respectively. Due to the fact that the frequency generator is the same for E- and B-field, the fields are in phase. Everything except the coil and the field plate is assembled in two metallic boxes, together with a contolling and recording mini-computer and the electronic circuit for the movement and environment sensors. The boxes can be hidden under the bed.

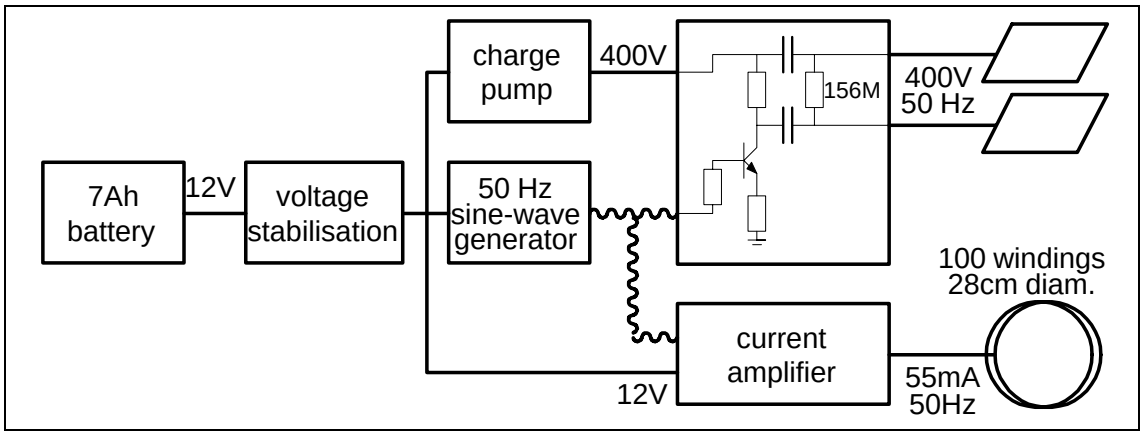

Fig. 3. Electric circuit scheme of the field generator used in project NEMESIS.

- *Sham exposure*

In the Project NEMESIS a double-blind approach is used. Each subject serves as its own control. In this case, two problems have to be discussed: What are the properties of sham exposure and are there any cues which give the subject or the experimenter any hints of whether the fields are on or off. In Project NEMESIS the sham exposure is the normal situation in the bedroom. To avoid intrusion of unwanted fields during the experiment, the subjects have been chosen with regard to weak background fields (10-100 nT resp. 0.5 V/m). Other environmental factors such as lighting, noise, temperature and humidity are continually registered. Due to the weak intensity of the fields used, visible, audible, tactile or olfactory cues are not to be expected (i.e. noise, vibration, hair movements, corona, ozone, discharges). It is also quite improbable that the subjects try to measure the fields with their own equipment (in order to cheat) because the fields are not switched on before 1:00 am.

- *Double-blind time schedule*

The provocation tests take place at night, usually from 1:00 am to 5:00 am for a period of 25 days. Five different field situations are used in a pre-programmed sequence, unknown to the subject and the experimenter:

1) Sham exposure	(8 nights)
2) E- and B-field together, continuous,	(3 double-night-blocks)
3) E- and B-field together, intermittent 10 min. on/off	(3 double-night-blocks)
4) E-field alone, continuous	(1 double-night-block)
5) B-field alone, continuous	(1 double-night-block)

- *Safety*

The whole system is constructed in an intrinsically safe manner. It is battery driven and not connected to the power supply network. Touching the charged fabric or shortcircuit it, does no harm to either the touching subject or the equipment itself. Potentially dangerous parts of the charging circuit (charge pump) are encapsulated in an isolating plastic casing which is contained in a metallic box during the experiments.

Discussion of first results

Investigations of the effect of ELF EMF on sleep are currently underway and no results are available at the moment. The equipment described above has been used in a pilot study

investigating the perceptive ability to EM-fields of subjects considering themselves to be hypersensitive to electricity. The 33 subjects had to detect from 20 situations whether the combined e-m-field (50 Hz, 2-3 µT, 60-80 V/m at head level) was on or off (sham). The fields were switched randomly for the duration ½ minute. 2 subjects could identify the situations correctly with a chance probability of 0.00020 resp. 0.00034. This is significant at the 5% level with correction for multiple testing (Bonferroni adjustment). A p-value plot, suggested by Schweder et al. [12, 13] (not given here) provides an estimate of the number of true null-hypotheses among the 33 being tested. It is in the present case only 20. So the results of 13 subjects can not be explained only by chance. This results should not be considered as a proof for weak-field perceptions but only as an indication. It is planned to replicate this pilot study in the laboratory.

References

[1] HAMNERIUS, AGRUP G. GALT, S. NILSSON R., SANDBLOM J., LINDGREEN R. (1985): Double blind provocation study with exposure to electromagnetic fields from VDUs. Proceeding of the COST 244 meeting on Electromagnetic Hypersensitivity, pp. 41-43.

[2] SELMAOUI B., BOGDAN A., AUZEBY A., LAMBROZO J., TOUITOU Y. (1996): Acute Exposure to 50 Hz Magnetic Field Does Not Affect Hematologic or Immunologic Functions in Healthy Young Men. Biolelectromagnetics, vol. 17, pp. 364-372.

[3] HAUF R. (1983): Untersuchungen über die Wirkung energietechnischer Felder auf den Menschen. In: G. Newi (Ed.) Biologische Wirkungen elektrischer, magnetischer und elektromagnetischer Felder. Expert Verlag, Grafenau, pp. 128-155.

[5] SILNY J. (1983): Wirkungen starker niederfrequenter magnetischer Felder auf den Organismus.. In: G. Newi (Ed.) Biologische Wirkungen elektrischer, magnetischer und elektromagnetischer Felder. Expert Verlag, Grafenau, pp. 85-106.

[6] REA W.J., PAN Y., FENYVES E.J., ET AL. (1991): Electromagnetic field sensitivity. J. of Bioelectricity, vol. 10, pp. 241-256.

[7] FRIEDMAN H., BECKER R.O., BACHMAN C.H. (1967): Effect of magnetic fields on reaction time performance. Nature, March, no. 4, pp. 949-950.

[8] SZUBA M., SZMIGIELSKI S. (1985): Change in reaction time to auditory and visual signals differentiates individual responses to short-term exposure to ELF electric fields and direct current stimulation. Proceeding of the COST 244 meeting on Electromagnetic Hypersensitivity, pp. 94-105.

[9] COHEN H.D., GRAHAM C., COOK M.R., PHELPS J.W. (1992): ELF exposure facility for human testing. Bioelectromagnetics, vol. 13, pp. 169-182.

[10] MICHAELSON S.M. (1985): Criteria for electric, magnetic or electromagnetic field bioeffects investigations. In: Biol. Effects and dosimetry of static and ELF electromagnetic fields. Gandolfo M., Michaelson D. Rindi A. (Eds); Plenum Press, pp. 15-29.

[11] MÜLLER C.H., SCHIERZ C., KRUEGER H. (1998): Effects of ELF electric and magnetic fields on physiological sleep parameters and sleep quality in humans. Proc. of COST 244bis International Workshop on electromagnetic fields and non-specific health symptoms. Graz Sept. 19-20; pp. 82-91.

[12] SCHWEDER T., SPJØTVOLL E. (1982): Plots of P-values to evaluate many tests simultaneously. Biometrika, vol. 69, no. 3, pp. 493-502.

[13] PARKER R.A., ROTHENBERG R.B. (1988): Identifying important results from multiple statistical tests. Statistics in medicine, vol. 7, pp. 1031-1043.

[14] KIRSCHVINK J.L. (1992): Uniform Magnetic Fields and Double-Wrapped Coils Systems: Improved Techniques for the Design of Bioelectromagnetic Experiments. Bioelectromagnetics, vol. 13, pp. 401-411.

Appendix

Calculation of the radial (B_r) and axial (B_z) magnetic field component, induced by a circular current J (in A) with radius a at the cylindrical coordinate point (r,θ,z) [14]. If μ is taken as 1.2566 μT m / A, the result will be in μT.

$$B_r = \frac{\mu \cdot J}{2\pi} \frac{1}{\sqrt{(a+r)^2 + z^2}} \frac{z}{r} \left[E(k) \frac{a^2 + r^2 + z^2}{(a-r)^2 + z^2} - K(k) \right]$$

$$B_z = \frac{\mu \cdot J}{2\pi} \frac{1}{\sqrt{(a+r)^2 + z^2}} \left[E(k) \frac{a^2 - r^2 - z^2}{(a-r)^2 + z^2} + K(k) \right]$$

with

$$k = \sqrt{\frac{4 \cdot a \cdot r}{(a+r)^2 + z^2}}$$

K(k) and *E(k)* are complete elliptic integrals of the first and second kind.